Audio VOX G4JNT March 2013

This circuit controls Tx/Rx switching by detecting the presence of audio drive to the transmitter / upconverter. The components fit onto a 25 x 25mm single sided PCB

The first Opamp stage functions as a precision rectifier, with a gain of around 5.6 times. A minimum RMS input of 100mV delivers a rectified output of around 0.8V. The 10uF capacitor on the output of this serves as a peak detect, with a slow decay determined by the 10k resistor feeding the next stage. The fast attack slower decay eliminates chattering on waveforms with a slow envelope change such as PSK31

The second Opamp operates as a comparator comparing the rectified voltage against a threshold set by the preset resistor. The 470k feedback resistor provides about 150mV of hysteresis, further assisting switching reliability. The comparator output drives a LED indicator and MOSFET switch controlling the transmit switching.

A zener diode regulated supply isn't essential if Vcc remains constant, but does ensure a more stable and known threshold when running on battery type supplies.

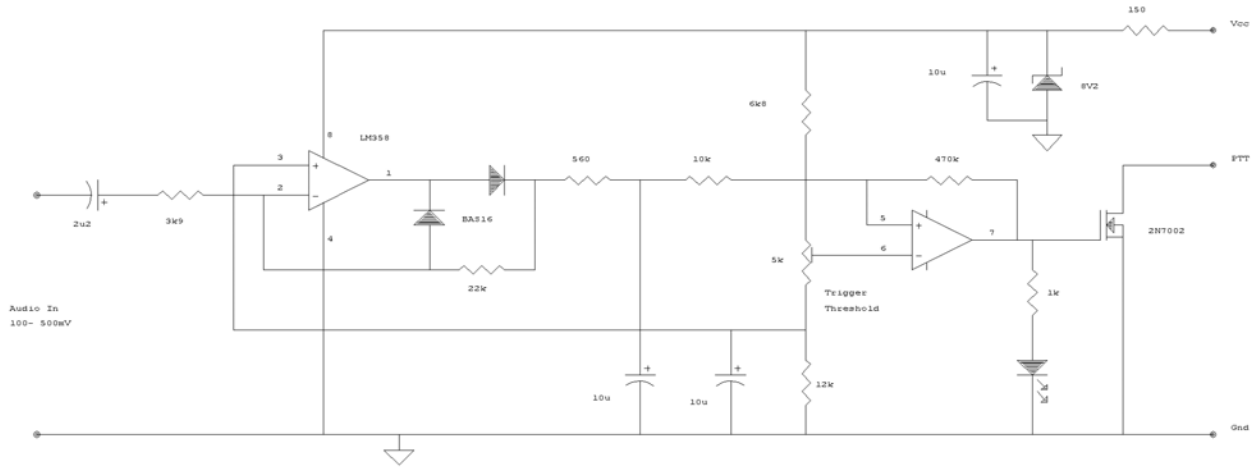

File ***audiovox.gif*** contains a higher resolution version of the circuit diagram.

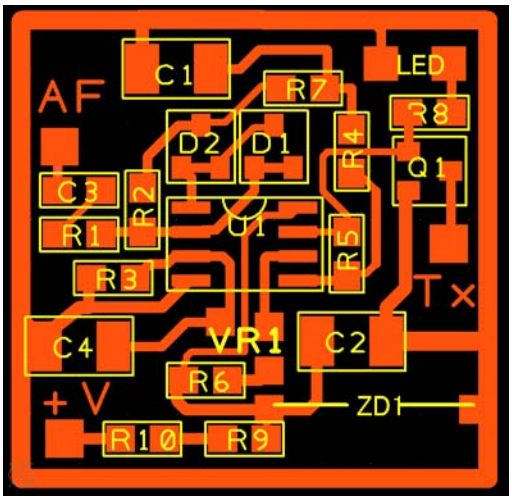

File ***AudioVoxPCB_Mirrored.pdf*** is a high resolution mirrored version of the copper pattern for homebrew PCB manufacture using Iron-on or U/V-Acetate.